NO. 80080

CAR RADIO SERVICE MANUAL

CUSTOM-MADE FOR TOYOTA LAND CRUISER

TOYOTA PART NO. 86120-60020 (TUNER ASS'Y, RADIO MODEL CR-5462.T)

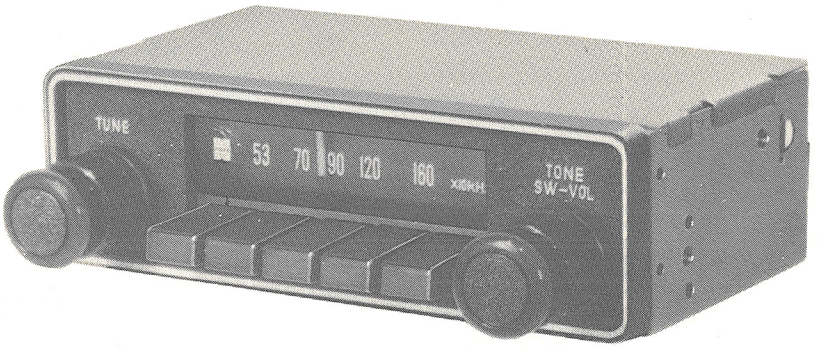

MODEL
CR-5462.T

AM 5-PUSHBUTTON SOLID STATE CAR RADIO

SPECIFICATIONS*

Frequency Range:	530 ~ 1605 kHz
Intermediate Frequency:	450 kHz
Sensitivity:	26 dB/μV
Power Output:	Continuous; 3.2 W (at 10% THD)
	Maximum; 4.0 W (Volume at max. & Tone in the treble)
	(Conditions; at 400 Hz, 4 Ω load, DC 13.2 V)
Power Supply Voltage:	DC 12 V (11 ~ 16 V), Negative Ground
Power Consumption:	Approx. 5.3 W (0.4 A at 0.5 W output, DC 13.2 V)
Speaker Impedance:	4 Ω
IC's:	2
Diodes:	3
Dimensions**:	Width; 6-5/16" (160 mm)
	Height; 1-7/8" (48 mm)
	Depth; 3-5/32" (80 mm)
Weight**:	1.8 lbs (0.8 kg)

Model CR-5462.T (Toyota Part No. 86120-60020) is the same series car radio as Model CR-5461.T (Toyota Part No. 86120-35025).
Refer to the Service Manual of Model CR-5461.T (Service Manual Order No. 80076) for the below items.
DIMENSIONS AND LOCATION OF CONTROLS
ALIGNMENT INSTRUCTIONS
PARTS LOCATION

COMPOSITION

Panasonic National Part No.	Toyota Part No.	Part Name	Pcs Set
CR-5462.T	86120-60020	Tuner Ass'y, Radio	1
EAS15D03SM	86160-60012	Speaker	1

*Specifications subject to change without notice.
**Dimensions and Weight shown are approximate.

TOYOTA MOTOR SALES CO., LTD.

EXPLODED VIEW

■ Numbers in ◯ are indicated REF. NO. in the REPLACEMENT PARTS LIST.

NOTE: The symbols next to the screws indicate as follows.

✣	YEJS05003	⊕Screw
⊕	XTB3+8FFXS	⊕Screw, Taptite 3mmφ×8mm
※	XYN3+F6FXS	⊕Screw w/Washer, 3mmφ×6mm
◆	XYN3+C10FXS	⊕Screw w/Washer, 3mmφ×10mm

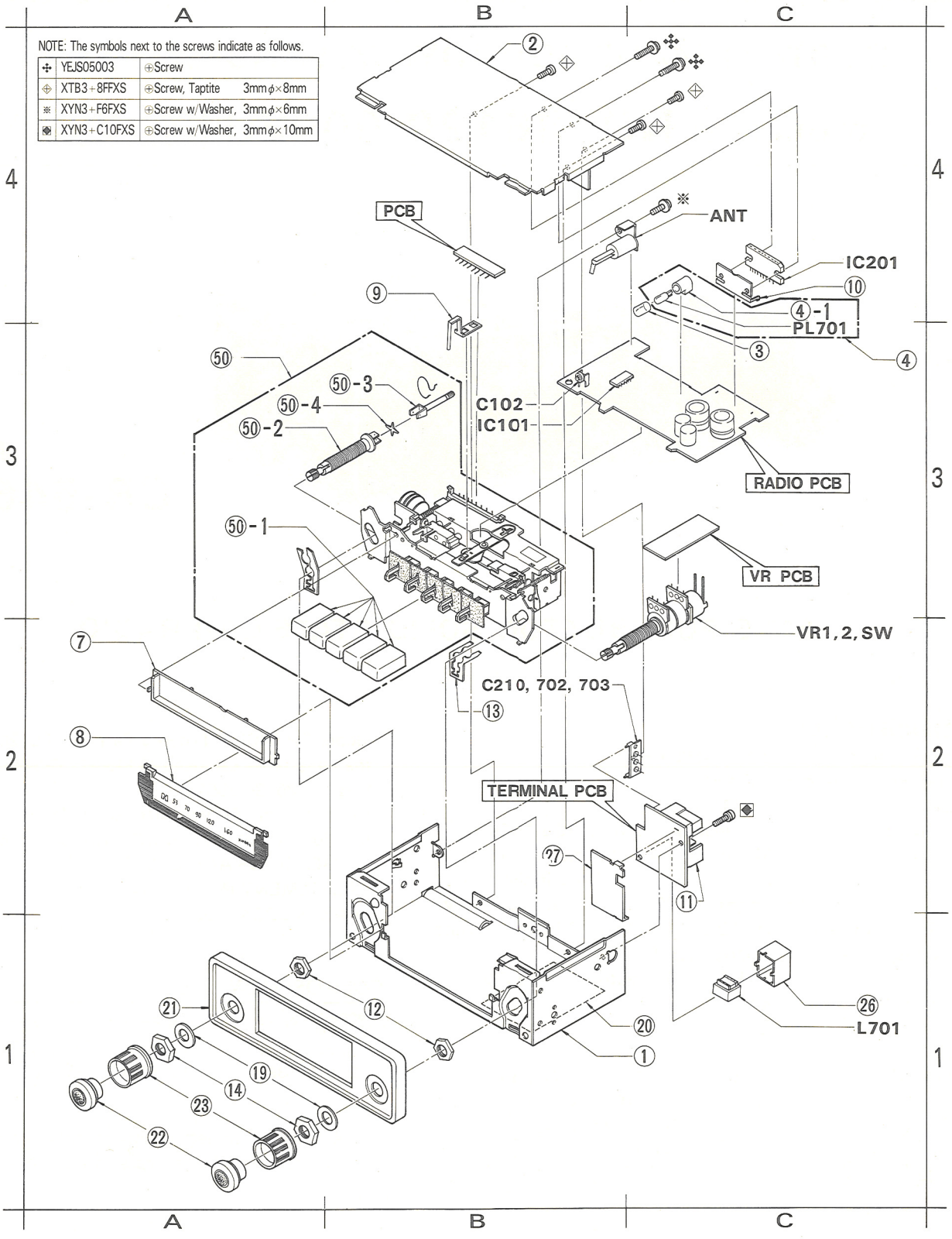

SCHEMATIC DIAGRAM

TOYOTA PART NO. 86120-60020
MODEL CR-5462.T

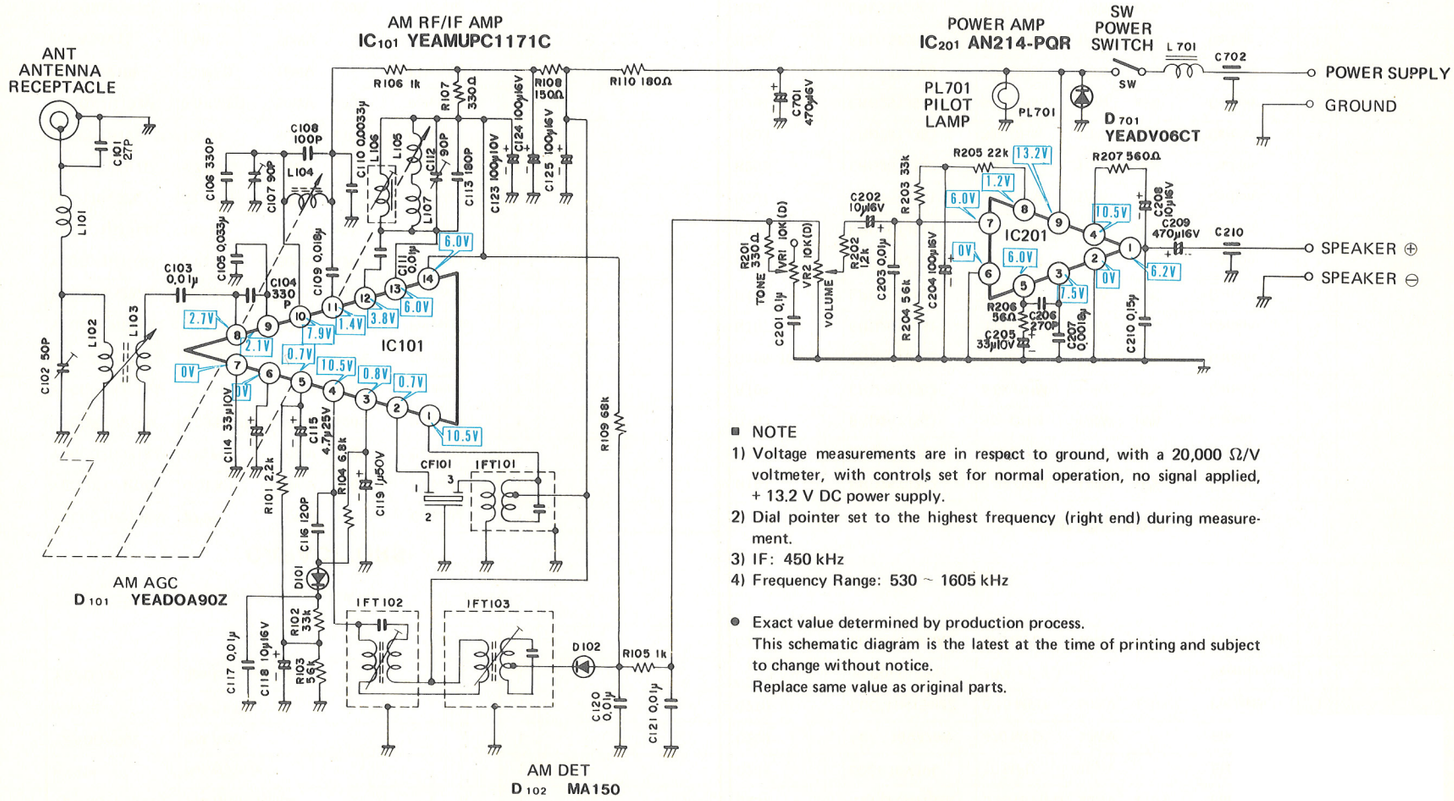

■ NOTE

1) Voltage measurements are in respect to ground, with a 20,000 Ω/V voltmeter, with controls set for normal operation, no signal applied, + 13.2 V DC power supply.
2) Dial pointer set to the highest frequency (right end) during measurement.
3) IF: 450 kHz
4) Frequency Range: 530 ~ 1605 kHz

● Exact value determined by production process.
This schematic diagram is the latest at the time of printing and subject to change without notice.
Replace same value as original parts.

WIRING DIAGRAM

TOYOTA PART NO. 86120-60020
MODEL CR-5462.T

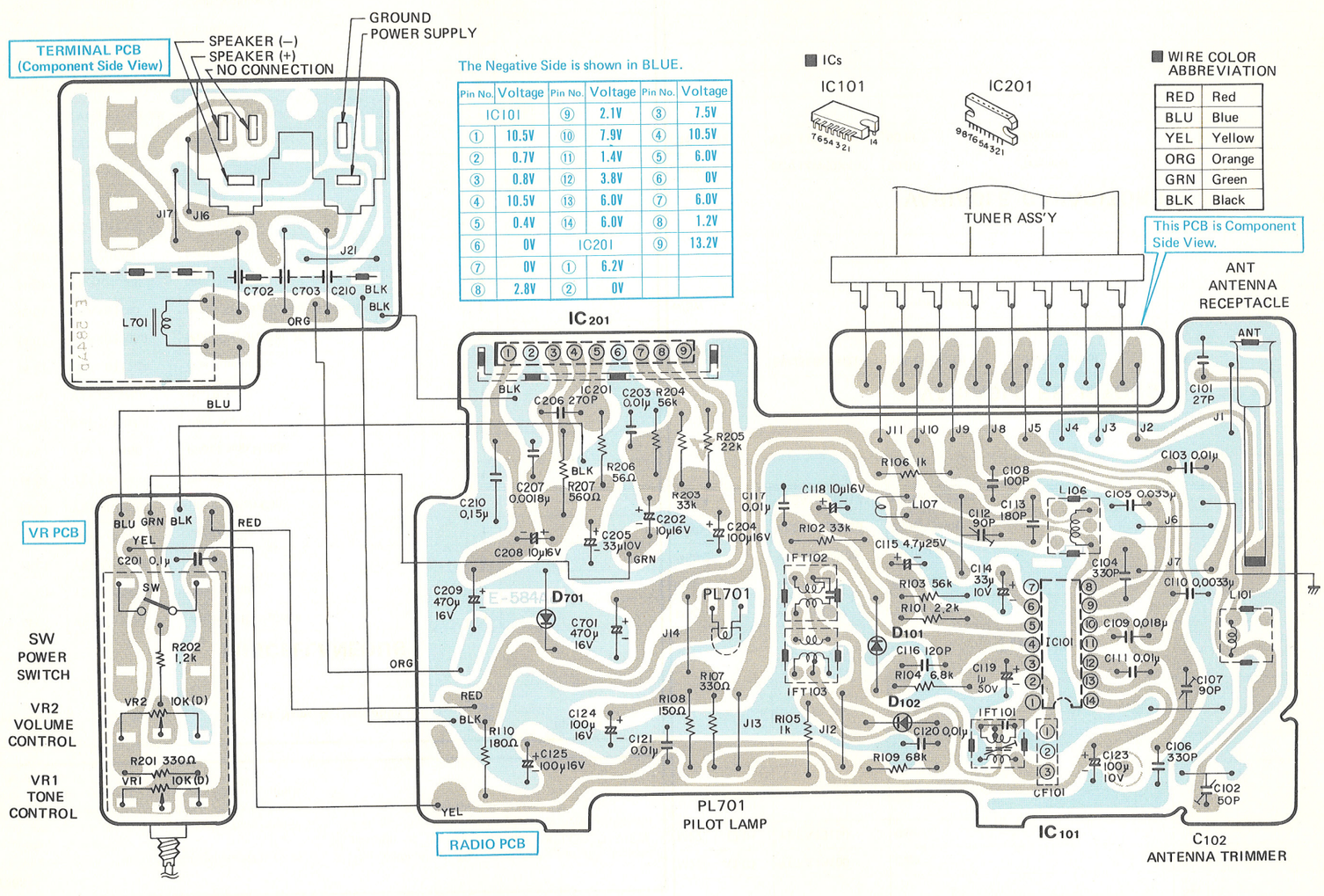

The Negative Side is shown in BLUE.

Pin No.	Voltage	Pin No.	Voltage	Pin No.	Voltage
IC101		⑨	2.1V	③	7.5V
①	10.5V	⑩	7.9V	④	10.5V
②	0.7V	⑪	1.4V	⑤	6.0V
③	0.8V	⑫	3.8V	⑥	0V
④	10.5V	⑬	6.0V	⑦	6.0V
⑤	0.4V	⑭	6.0V	⑧	1.2V
⑥	0V	IC201		⑨	13.2V
⑦	0V	①	6.2V		
⑧	2.8V	②	0V		

■ ICs

IC101 IC201

■ WIRE COLOR ABBREVIATION

RED	Red
BLU	Blue
YEL	Yellow
ORG	Orange
GRN	Green
BLK	Black

Replacement Parts List
Model NO. CR-5462.T (TOYOTA PART NO. 86120-60020)

NOTES:

1. Be sure to make your orders of replacement parts according to this list.
2. Components identified by shaded area have special characteristics important for safety. When replacing any of these components, use only manufacturer's specified parts.
3. The column of Ref. No. indicates the located position of the parts on the EXPLODED VIEW, and see the cross section of the horizontal column (1 ~ up) and the vertical column (A ~ up).

Ref. No.	Part No.	Part Name & Description	Pcs Set	Remarks
MISCELLANEOUS				
ANT (4-C)	YEAA10025	Antenna Receptacle	1	
PL701 (3-C)	YEAL25001W	Pilot Lamp	1	
M1 (1-C)	YEFA01207D	Chassis	1	
M2 (4-B)	YEFA03284	Upper Cover	1	
M3 (3-C)	YEFR04085	Illumination Cap	1	
M4 (4-C)	YEFK04165	Pilot Lamp Holder Ass'y	1	
M4-1 (4-C)	YEFK04150	Pilot Lamp Holder	1	
M7 (2-A)	YEFJ10197	Back Plate	1	
M8 (2-A)	YEFJ08370A	Dial Plate	1	
M9 (4-B)	YEFH01176A	Dial Pointer	1	
M10 (4-C)	YEFX021350	Mounting Bracket, IC	1	
M11 (2-C)	YEAT03150	Power Supply/Speaker Terminal	1	
M12 (1-B)	YEJN01028FX	Nut, Hexagon	2	
M13 (2-B)	YEJE01008	E-Ring	1	
M14 (1-A)	YEJN01037FX	Nut, Hexagon	2	
M15	YEJS05003	+ Screw	2	
M16	XTB3 + 8FFXS	+ Screw, Taptite 3mmø x 8mm	3	
M17	XYN3 + F6FXS	+ Screw w/Washer, 3mmø x 6mm	1	
M18	XYN3 + C10FXS	+ Screw w/Washer, 3mmø x 10mm	1	
M19 (1-A)	YEJW02007AW	Washer, Flat	2	
M20 (1-C)	YEFM1335	Main Seal	1	
M21 (1-A)	YEFC02317A	Escutcheon	1	
M22 (1-A)	YEFE07081	Knob, Volume & Tuning	2	
M23 (1-A)	YEFE08072	Knob, Tone & Dummy	2	
M25	YEFA13113	Case	1	

Ref. No.	Part No.	Part Name & Description	Pcs Set	Remarks
M26 (1-C)	YEFA13100	Case	1	
M27 (2-B)	YEFA13150	Case	1	
TUNER				
M50	YEAU05242	Tuner Ass'y	1	
M50-1	YEFE10192	Push Button	5	
M50-2	YESAU05S085	Tuning Shaft	1	
M50-3	YESAU02Z030	Pinion Shaft	1	
M50-4	YESAU02Z017	Universal Joint	1	
VARIABLE RESISTORS				
VR1,	EWJ3LBS24D14	10k OHM (D) Tone Control	1	
2		10k OHM (D) Volume Control		
w/SW		w/Power Switch		
VARIABLE CAPACITORS				
C102	ECV1ZW50X40	50 PF Trimmer	1	
C107, 112	YECTT1090	90 PF Trimmer	2	

Ref. No.	Part No.	Part Name & Description	Pcs Set	Remarks
ICs AND DIODES				
IC101	YEAMUPC1171C	AM RF/IF Amp	1	
IC201	AN214	Power Amp	1	
D101	YEADOA90Z	AM AGC	1	
D102	MA150	AM DET	1	
D701	YEAD030	Spark Suppression	1	
CAPACITORS				
C101	YECCD1H270KM	27 PF 50WV ±10% Ceramic	1	
C103	YECQX1H103M	0.01 MFD 50WV ±20% Polyester	1	
C104	YECCD1H331KM	330 PF 50WV ±10% Ceramic	1	
C105	YECQX1H333M	0.033 MFD 50WV ±20% Polyester	1	
C106	YECCD1H331KM	330 PF 50WV ±10% Ceramic	1	
C108	YECCD1H101KM	100 PF 50WV ±10% Ceramic	1	
C109	YECQX1H183M	0.018 MFD 50WV ±20% Polyester	1	
C110	YECQX1H332K	0.0033 MFD 50WV ±10% Polyester	1	
C111	YECQX1H103M	0.01 MD 50WV ±20% Polyester	1	
C113	YECCD1H181JR	180 PF 50WV ±5% Ceramic	1	
C114	ECEA10V33L	33 MFD 10WV Electrolytic	1	
C115	ECEA25V4R7L	4.7 MFD 25WV Electrolytic	1	
C116	YECCD1H121KM	120 PF 50WV ±10% Ceramic	1	
C117	YECQX1H103M	0.01 MFD 50WV ±20% Polyester	1	
C118	ECEA16V10L	10 MFD 16WV Electrolytic	1	
C119	ECEA50V1L	1 MFD 50WV Electrolytic	1	
C120, 121	YECQX1H103M	0.01 MFD 50WV ±20% Polyester	2	
C123	ECEA10V100L	100 MFD 10WV Electrolytic	1	
C124, 125	ECEA16V100L	100 MFD 16WV Electrolytic	2	
C201	YECCD12104M	0.1 MFD 50WV ±20% Ceramic	1	
C202	ECEA16V10L	10 MFD 16WV Electrolytic	1	
C203	YECQX1H103M	0.01 MFD 50WV ±20% Polyester	1	
C204	ECEA16V100L	100 MFD 16WV Electrolytic	1	

Ref. No.	Part No.	Part Name & Description	Pcs Set	Remarks
C205	ECEA10V33L	33 MFD 10WV Electrolytic	1	
C206	YECCD1H271KM	270 PF 50WV ±10% Ceramic	1	
C207	YECQX1H182K	0.0018 MFD 50WV ±10% Polyester	1	
C208	ECEA16V10L	10 MFD 16WV Electrolytic	1	
C209	ECEA16V470W	470 MFD 16WV Electrolytic	1	
C210	ECQM1H154MZ	0.15 MFD 50WV ±20% Polyester	1	
C211, 702, 703	YECCL510353	1000 PF x 3 Feedthrough	1	
C701	ECEA16V470W	470 MFD 16WV Electrolytic	1	
RESISTORS				
R101	ERD25TJ222	2.2k OHM 1/8W ±5% Carbon	1	
R102	ERD25TJ333	33k OHM 1/8W ±5% Carbon	1	
R103	ERD25TJ563	56k OHM 1/8W ±5% Carbon	1	
R104	ERD25TJ682	6.8k OHM 1/8W ±5% Carbon	1	
R105, 106	ERD25TJ102	1k OHM 1/8W ±5% Carbon	2	
R107	ERD25TJ331	330 OHM 1/8W ±5% Carbon	1	
R108	ERD25TJ151	150 OHM 1/8W ±5% Carbon	1	
R109	ERD25TJ683	68k OHM 1/8W ±5% Carbon	1	
R110	ERD25TJ181	180 OHM 1/8W ±5% Carbon	1	
R201	ERD25TJ331	330 OHM 1/8W ±5% Carbon	1	
R202	ERD25TJ122	1.2k OHM 1/8W ±5% Carbon	1	
R203	ERD25TJ333	33k OHM 1/8W ±5% Carbon	1	
R204	ERD25TJ563	56k OHM 1/8W ±5% Carbon	1	
R205	ERD25TJ223	22k OHM 1/8W ±5% Carbon	1	
R206	ERD25TJ560	56 OHM 1/8W ±5% Carbon	1	
R207	ERD25TJ561	560 OHM 1/8W ±5% Carbon	1	

Ref. No.	Part No.	Part Name & Description	Toyota Part No.	Pcs Set	Remarks
COILS, TRANSFORMERS AND CERAMIC FILTER					
L101	YELQ07S046	RF Choke Coil		1	
L106	YELL07S070	OSC Coil		1	
L107	YELT06N5R6	RF Coil		1	
L701	YETQ021F037	Choke Coil		1	
IFT101	YEIA07S7099	AM IFT		1	
IFT102	YEIA07S7100	AM IFT		1	
IFT103	YEIA07S7101	AM IFT		1	
CF101	YEIN08N5008	AM Ceramic Filter		1	
ACCESSORIES					
SP	EAS15D03SM	86160-60012	Speaker	1	

PARTS AVAILABILITY

U. S. A. — PANASONIC PARTS DEPOT

NEW JERSEY
PANASONIC CONSUMER PARTS DIVISION
ONE PANASONIC WAY SECAUCUS, NEW JERSEY 07094
PHONE: (201)-348-7000

CHICAGO
PANASONIC CONSUMER PARTS DIVISION
3201 TOLLVIEW DRIVE, ROLLING MEADOWS, ILLINOIS 60008
PHONE: (312)-394-8012

ATLANTA
PANASONIC CONSUMER PARTS DIVISION
#2 MECA WAY DULUTH, GEORGIA 30136
PHONE: (404)-448-2456

DALLAS
PANASONIC CONSUMER PARTS DIVISION
2945 CONGRESSMAN LANE DALLAS, TEXAS 75220
PHONE: (214)-350-2436

LOS ANGELES
PANASONIC CONSUMER PARTS DIVISION
2121 YATES AVENUE CITY OF COMMERCH, CALIFORNIA 90040
PHONE: (213)-723-6271

HAWAII
PANASONIC HAWAII, INC
320 WAIAKAMILO ROAD HONOLULU, HAWAII 96808
PHONE: (808)-847-5361

CANADA — PANASONIC PARTS DEPOT

TORONTO
MATSUSHITA ELECTRIC OF CANADA LTD
40 RONSON DRIVE REXDALE 603 ONTARIO
PHONE: (416)-248-5551

EUROPE — NATIONAL PANASONIC PARTS DEPOT

FRANKFURT
NPS. NATIONAL PANASONIC SERVICE G. M. B. H. REPAIR CENTER
6000 FRANKFURT/MAIN 8 HIRTENSTRASSE 9-11, F. R. GERMANY
PHONE: 0611-239081

SCANDINAVIA — NATIONAL PANASONIC PARTS DEPOT

STOCKHOLM
NATIONAL PANASONIC SCANDINAVIAN SERVICE A. B
INSTRUMENTVAGEN 29-31, BOX 43047, 100 72 STOCKHOLM, SWEDEN
PHONE: 08-190180

AUSTRALIA — NATIONAL PANASONIC PARTS DEPOT

SYDNEY
NATIONAL PANASONIC (AUSTRALIA) PTY, LTD
57 ANZAC PARADE KENSINGTON, N. S. W. 2033
PHONE: 662-1222

MELBOURNE
NATIONAL PANASONIC (AUSTRALIA) PTY, LTD
14-21 RAILWAY CRESCENT CROYDON, VICTORIA 3136
PHONE: 725-6366

ADELAIDE
NATIONAL PANASONIC (AUSTRALIA) PTY, LTD
15-17 KINGSTON AVENUE RICHMOND, SOUTH AUSTRALIA 5033
PHONE: 352-1688

PERTH
NATIONAL PANASONIC (AUSTRALIA) PTY, LTD
85 MARLOW STREET WEMBLEY, W. A. 6014
PHONE: 87-5700

BRISBANE
NATIONAL PANASONIC (AUSTRALIA) PTY, LTD
52 COSTIN STREET FORTITUDE VALLEY, QLD. 4006
PHONE: 52-7888

OTHER COUNTRIES

Please contact your TOYOTA DISTRIBUTORS as to service and parts for TOYOTA custom-made Radios, Stereos and Transceivers.

NO. 80080

(Service Manual Order No.)

PRINTED IN JAPAN
1978. 7. 1500 G